District Heating

Plate heat exchanger application

Urban energy consumption in winter is magnificent, due to the people comfort need increases dramatically.

Heat could be produced directly from fossil fuel and waste incineration, or surplus heat recovery, or electric heater.

However, for both environmental and economic concerns, how to control the losses in distribution as little as possible, and increase the thermal energy exchange efficiency could be challenge.

HFA Industry

Steam turbine exhaust steam evaporative condenser

Although the thermal energy or surplus heat offered by plants are still usually produced in a wasted way, yet at least we do not have to convert them again to use air-conditioner.

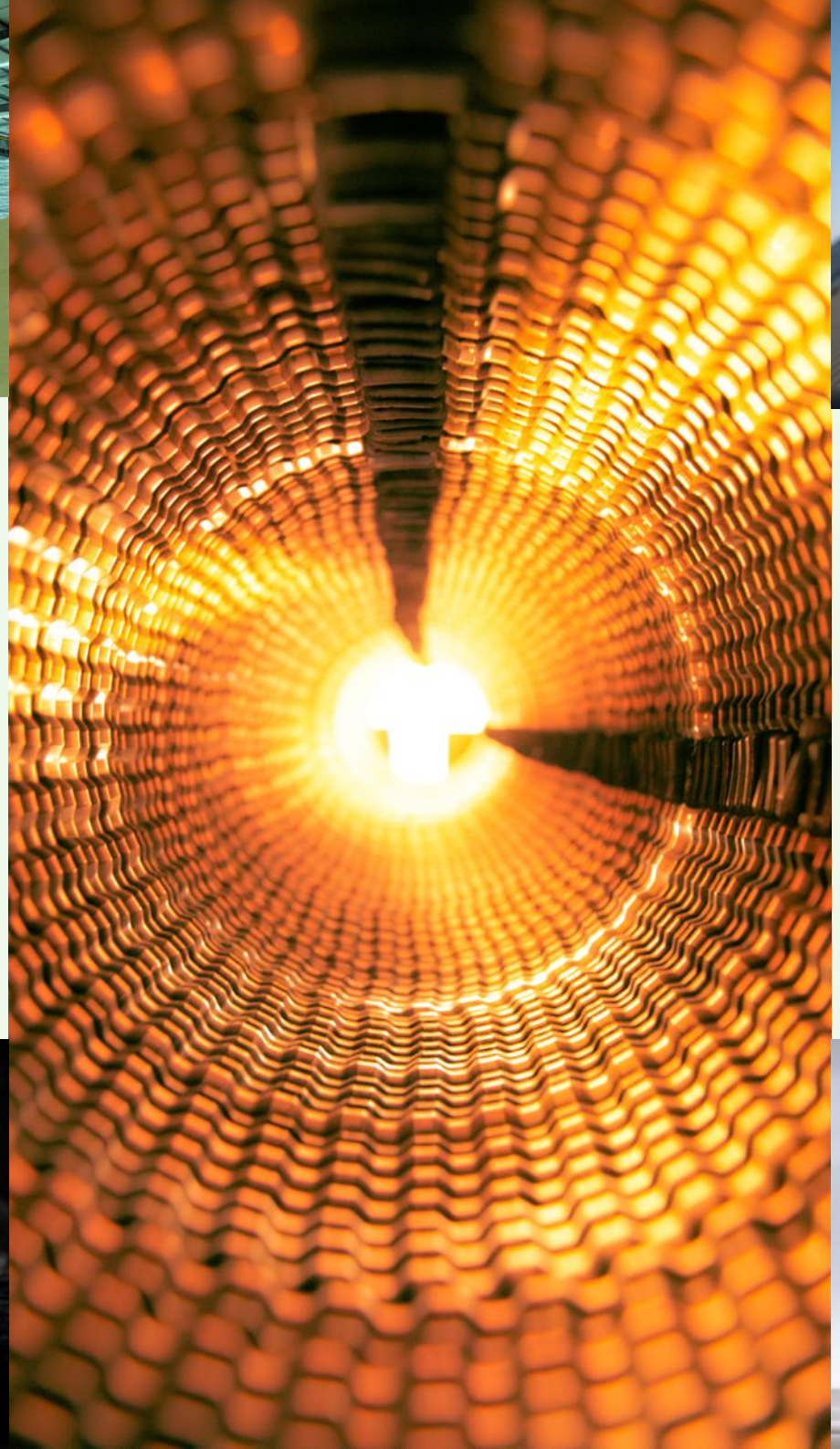

Renewable energy like solar, biofuels and geothermal should be considered as supplementary heat sources.

Although we recommend to use thermal energy for district heating system, there are some details municipality or local planning authority should concern.
Firstly, the transmission capacity of thermal energy is far behind natural gas and electricity, especially in long distance, this is why district heating stations are always built in residential area as units.
Secondly, it is better to keep the water at a low temperature better than high temperature due to the energy loss could be smaller.
Thirdly, out of economic and energy efficiency concerns, areas comprising multi-functional and dense structures are of special interest for district heating, mix of function affects the temporal patterns of heat demand, so that the difference of base load and peak load can be reduced and full-load hours can be increased.

HX BOX

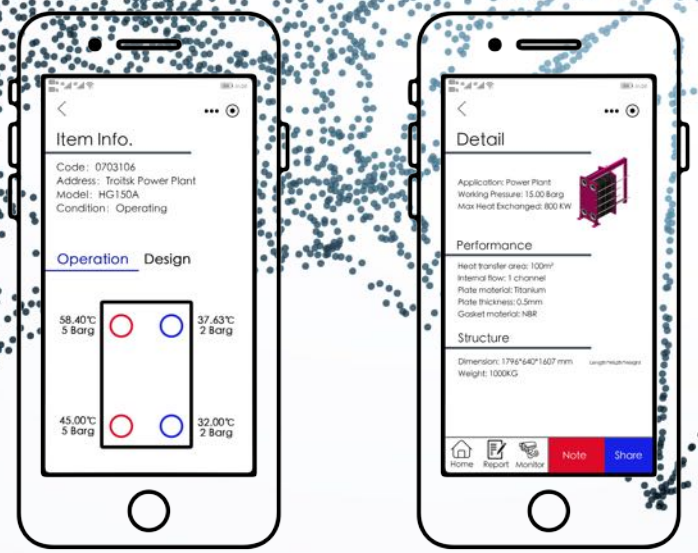

Hofmann has now developed a whole new IOT system aims to integrate single heat exchanger unit with global thermal statistic analysis algorithm, which could help our customers detect thermal exchanger inefficiency and acquiring diagnosis before it's too late.
Have you encounter repeated modifying the inlet temperature every time you change the material, or complicated power and data cable you could never fix by yourself, or absence of monitoring?
HX Box is carrying high-precision sensors, with independent power supply and network which could adapt harsh environment, you could remotely access the real time data through the APP.

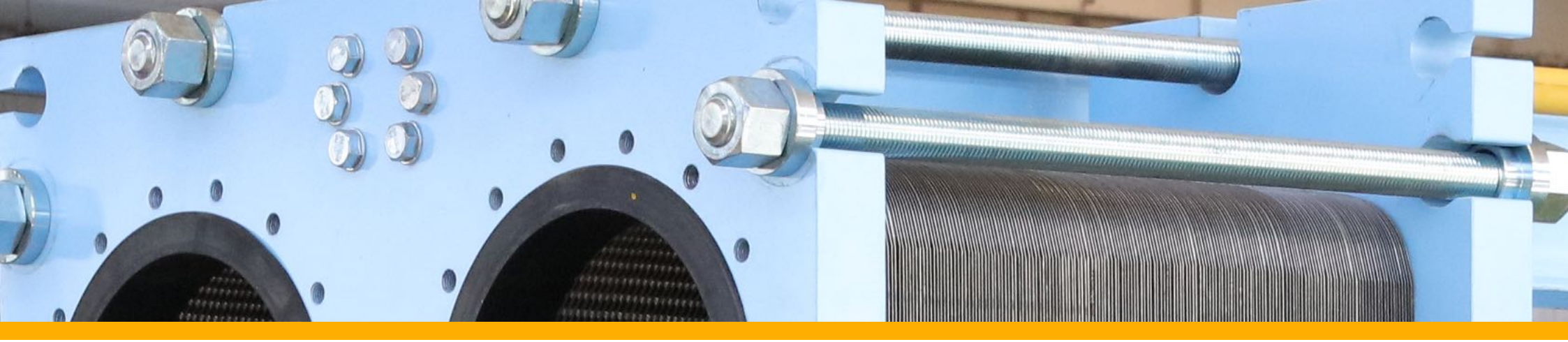

	Water(Pressurized) / Hot	Water / Cold
Actual volume flow m³/h	28.2	70.3
Design pressure MPa	1.0	1.0
Temperature inlet/ outlet °C	135/ 70	65/ 90
Pipe diameter DN	100	
Pressure drop/ kPa	7.88	48.5

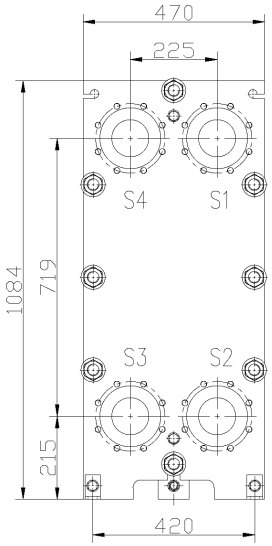

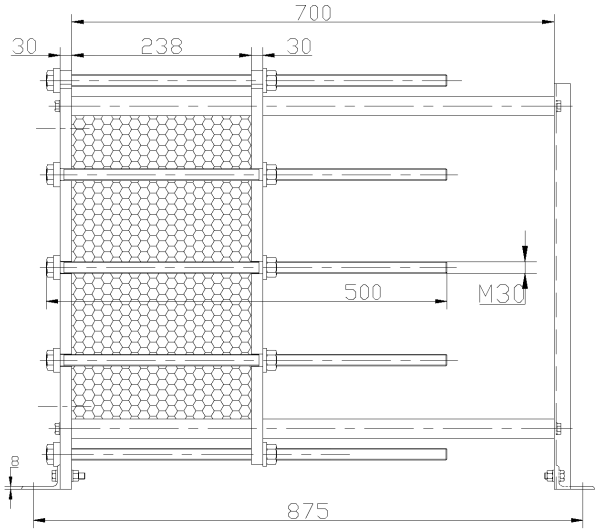

Hofmann has been designing and manufacturing customized plate heat exchanger for district heating at high COP.
In this case, as the compressor keep running, the tube and plate heat exchanger could be reducible as a high-pressure vessel, under this particular circumstances can the boiling point of water be above 135 °C. Huge thermal energy is going to be transferred to the 65°C water to 90°C through those plates.
The gasket is made specific for high temperature use, but still we recommend our customers to change them every year, no more than two, due to exposing under the air too long during the non operation period.

PHE Standard Range General Specifications

	Gasket plate heat exchanger
Max connection diameter/DN	500
Max. volume flow m³/h	4000
Max. Heat transfer surface/m²	1520
Designed Pressure rate MPa	2.5
Temperature °C	-40-180
Plate material	304 SS, 316 SS, Titanium
Frame material	Carbon Steel, 304 SS, 316 SS

Gasket plate heat exchanger's temperature bearing range is between -40-180°C, which is depending on gasket material. It's qualified of the process of heat exchanging and waste heat recovery in district heating system. Its volume capability is variable by simple increase or decrease the number of the plates.

Our service is better than you expected

HFM offers rich experience in HVAC businesses. We have multiple global warehouses and service teams around the world, the delivery time and freight are reduced to the largest extent, and spare parts can be delivered at the fastest speed. Manufacturing is merely one part of our business, knowing our customers requirements and acknowledge various kinds of working conditions is our daily life.

1, Inventory management
In order to ensuring delivery effectiveness, based on the acknowledge of PHE market and supply chain management, HFM has distributed the warehouses around the world.
2, Spares replacement
HFM has the full range of plate heat exchanger spares, our service engineers could either travel to the scene or remote guid your team to replace.
3, Cleaning service
HFM can provide both CIP(cleaning in place) and disassembling cleaning services depending on your circumstances.

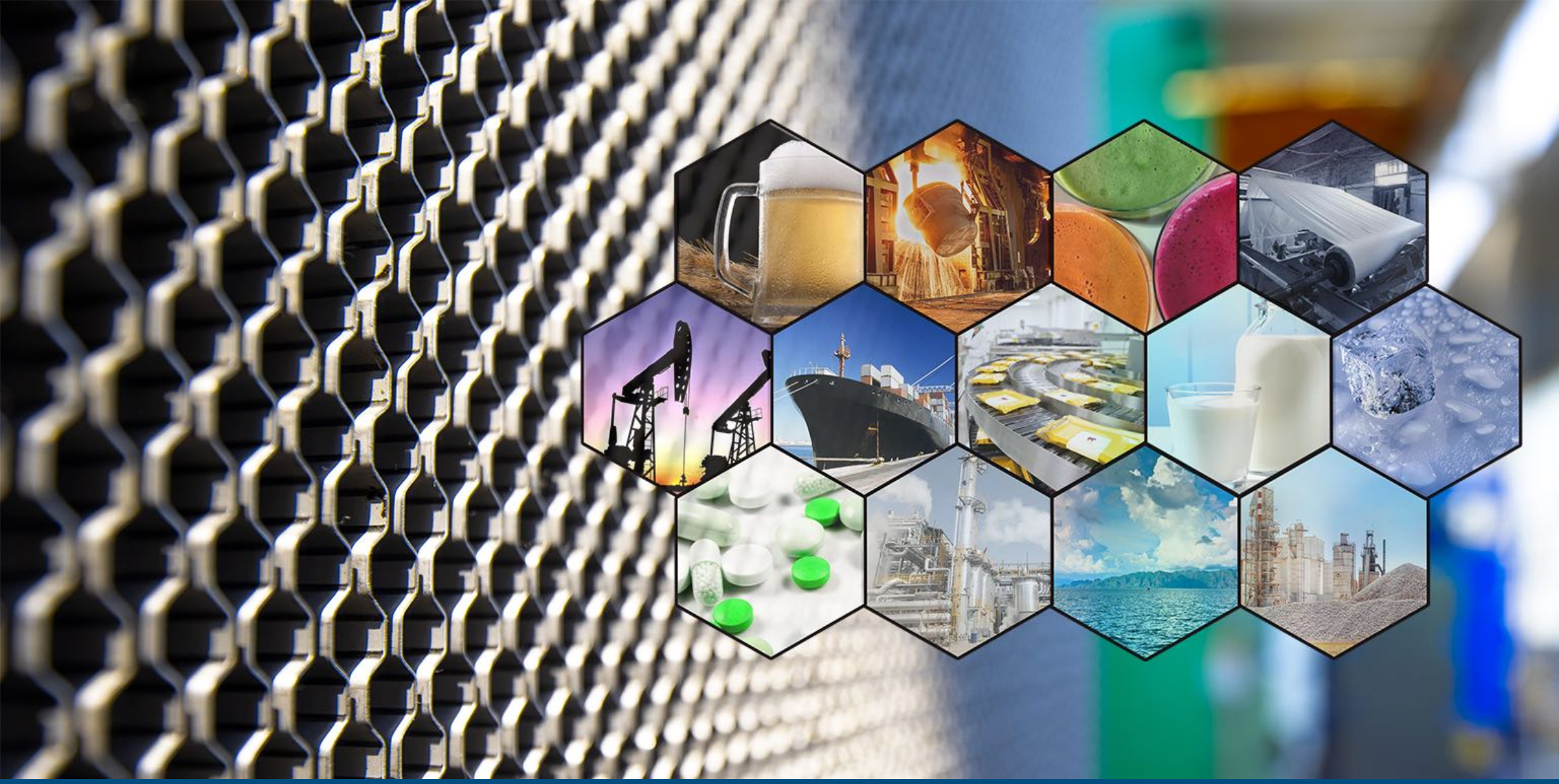

Professional design solution:

Our technical department dealt with various application year after year, the accumulative experience forged a special team with exploring spirit and critical spirit. The gasket plate heat exchanger is our core business, thousands of units have been in services for many years in different fields.

Service is our cornerstone：

We consider customer as our priority, understanding customers' real needs and rapid feedback are the basics.
We and customers are bound to each other for learning and developing, sharing knowledge keeps us growing, which makes accomplishing projects easier and faster.

www.hofmann-heatexchanger.com

Download HFM Cloud for more
products information

Follow us